# The Ford Transmission

*What is the function of the Transmission?*

## Answer No. 69

It is that part of the mechanism of an automobile which lies between the crank shaft and the drive shaft and by which one is enabled to move at different speeds from the other. It is the speed gear of the car. It sends the car forward at low and high speeds and by it the car is reversed.

*What is meant by the term "Planetary Transmission?"*

## Answer No. 70

One in which the groups of gears always remain in mesh and revolve around a main axis. The different sets of gears are brought into action by stopping the revolution of the parts which support the gears. By means of bands (similar to brake bands) the rotation of the different parts is stopped. The planetary transmission is the simplest and most direct means of speed control—and is a distinct advantage of the Ford car.

*What is the purpose of the Clutch?*

## Answer No. 71

If the crank shaft of the engine ran without break straight through to the differential—and through it applied its power direct to the rear wheels—the car would start forward immediately upon the starting of the engine (were it possible to get it started under such conditions). To overcome this difficulty the shaft is divided and by means of the clutch the part of the shaft to which the running engine is delivering its power is enabled to take hold of the unmoving part gradually and start the car without jolt or jar. The forward part of the shaft is referred to as the crank shaft, the rear part as the drive shaft.

*How is the Clutch controlled?*

## Answer No. 72

By the left pedal at the driver's feet (see Answer No. 10). If the clutch pedal, when pushed forward into slow speed, has a tendency to stick and not come back readily into high, tighten up the slow speed band as directed in Answer No. 74. Should the machine have an inclination to creep forward when cranking, it indicates that the clutch lever screw which bears on the clutch lever cam has worn, and requires an extra turn to hold the clutch in neutral position. When the clutch is released by pulling back the hand lever the pedal should move forward a distance of 1¾" in passing from high speed to neutral. See that the hub brake shoe and connections are in proper order so that the brake will act sufficiently to prevent the car creeping very far ahead. Also be sure the slow speed band does not bind on account of being adjusted too tight. Don't use a too heavy grade of oil in cold weather as it will have a tendency to congeal between the clutch discs and prevent proper action of the clutch.

*How is the Clutch adjusted?*

## Answer No. 73

Remove the plate on the transmission cover under the floor boards at the driver's feet. Take out the cotter key on the first clutch finger and give the set screw one-half to one complete turn to the right with a screw-driver. Do the same to the other finger set screws. But be sure to give each the same number of turns and don't forget to replace the cotter key. And after a considerable period of service

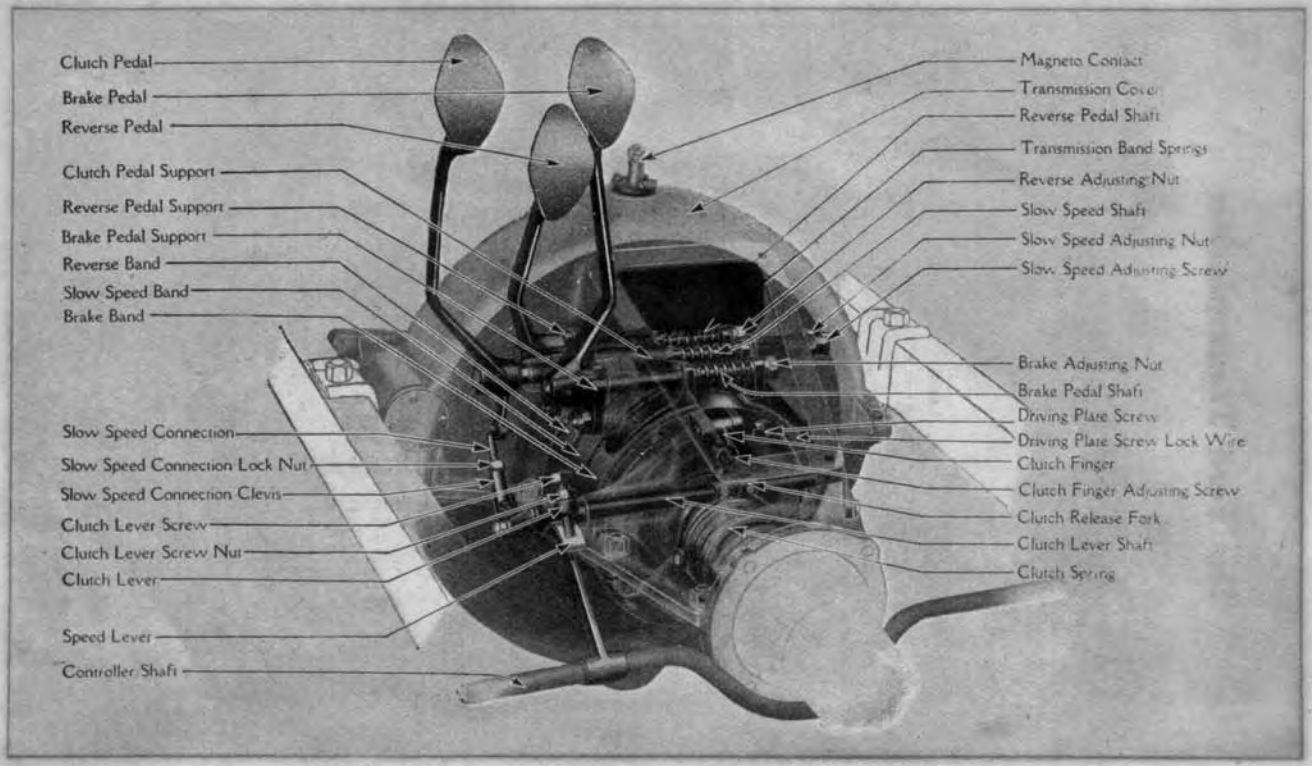


**The above drawing of Transmission shows clearly the operation of Clutch, Reverse and Brake Pedals. (Cut No. 12)**

the wear in the clutch may be taken up by installing another pair of clutch discs, rather than by turning the adjusting screws in too far.

CAUTION: Let us warn you against placing any small tools or objects over or in the transmission case without a good wire or cord attached to them. Otherwise if they are dropped into the transmission case it is almost impossible to recover them without taking off the transmission cover.

*How are the Bands adjusted?* **Answer No. 74**

The slow speed band may be tightened by loosening the lock nut at the right side of the transmission cover, and turning the adjusting screw (see Cut No. 12) to the right. To tighten the brake and reverse bands remove the transmission cover door and turn the adjusting nuts on the shafts to the right. See that the bands do not drag on the drums when disengaged, as they exert a brake effect, and tend to overheat the motor. However, the foot brake should be adjusted so that a sudden pressure will stop the car immediately, or slide the rear wheels in case of emergency. The bands, when worn to such an extent that they will not take hold properly, should be relined, so that they will engage smoothly without causing a jerky movement of the car. The lining is inexpensive and may be had at any Ford service station at small cost.

*How are the Bands removed?* **Answer No. 75**

Remove the starting motor (see Answer No. 128). Take off the door on top of transmission cover. Turn the reverse adjustment nut and the brake adjustment nut to the extreme end of the pedal shafts, then remove the slow speed adjusting screw. Remove the bolts holding the transmission cover to crank case and lift off the cover assembly. Slip the band nearest the flywheel over the first of the triple gears, then turn the band around so that the opening is downward. The band can now be removed by lifting upward. The operation is more easily accomplished if the three sets of triple gears are so placed that one set is about ten degrees to the right of center at top. Each band is removed by the same operation. It is necessary to shove each band forward on to the triple gears as at this point only is there sufficient clearance in the crank case to allow the ears of the transmission bands to be turned downward. By reversing this operation the bands may be installed. After being placed in their upright position on the drums pass a cord around the ears of the three bands, holding them in the center so that when putting the transmission cover in place no trouble will be experienced in getting the pedal shafts to rest in the notches in the band ears. The clutch release ring must be placed in the rear groove of the clutch shift. With the cover in place remove the cord which held the bands in place while the cover was being installed.

*How is the Transmission assembled?* **Answer No. 76**

Cut No. 13 shows the transmission parts in their relative assembling positions and grouped in their different operations of assembling.

The first operation is the assembling of group No. 2, which is as follows: Place the brake drum on table with the hub in a vertical position, place the slow speed plate over the hub with gear uppermost. Then place reverse plate over the slow speed plate so that the reverse gear surrounds the slow speed gear. Fit the two keys in the hub just above the slow speed gear. Put the driven gear in position with the teeth downward so that they will come next to the slow speed gear. Take the three triple gears and mesh them with the driven gear according to the punch marks on the teeth, the reverse gear or smallest of the triple gear assembly being

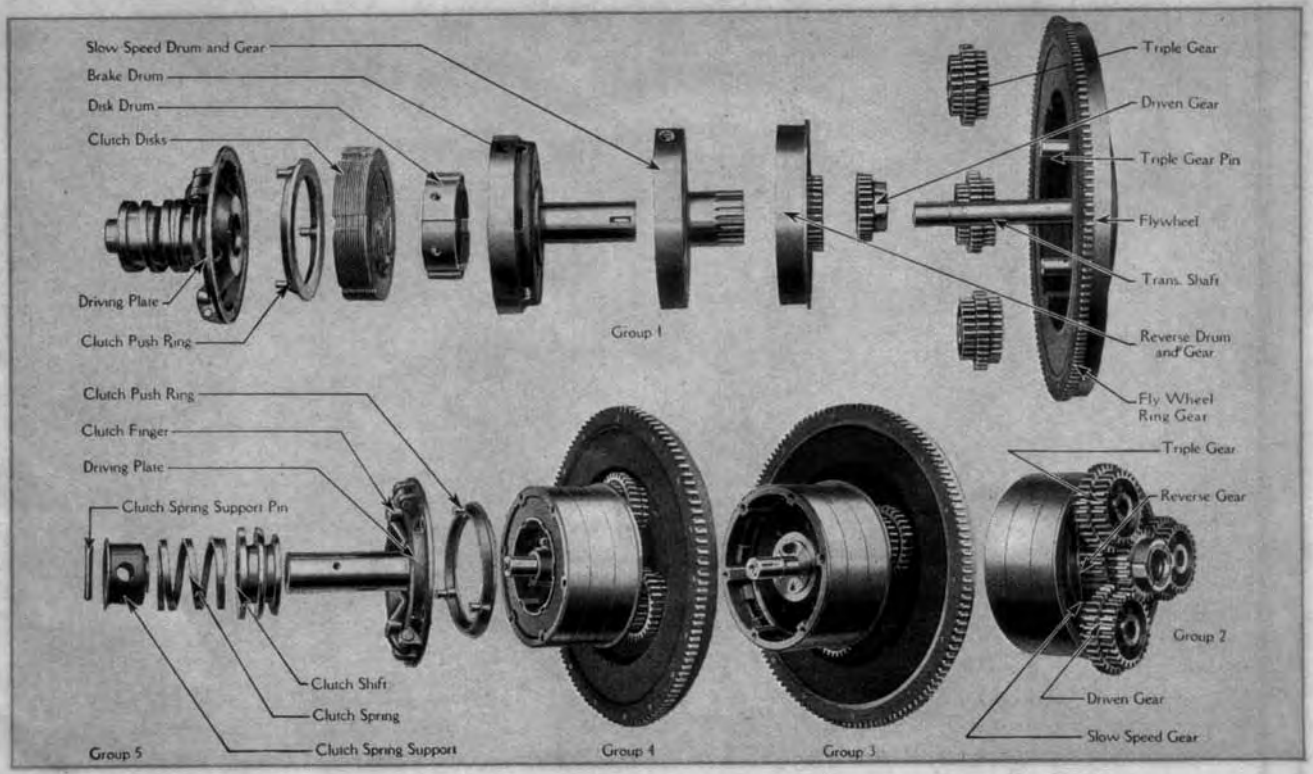


**Transmission parts in their relative assembling positions. (Cut No. 13)**

downward. After making sure that the triple gears are properly meshed tie them in place by passing a cord around the outside of the three gears. Take the flywheel and place it on the table with the face downward and the transmission shaft in a vertical position; then invert the group which you have assembled over the transmission shaft, setting it in position so that the triple gear pins on the flywheel will pass through the triple gears. This will bring the brake drum on top in a position to hold the clutch plates, etc. The next step is to fit the clutch drum key in the transmission shaft. Press the clutch disc drum over the shaft and put the set screw in place to hold the drum. Put large disc over the clutch drum, then a small disc, alternating with large and small discs until the entire set of discs are in position, ending up with a large disc on top.

If a small disc is on top it is liable to fall over the clutch drum in changing the speed from high to low and as a result you would be unable to change the speed back into high. Next put the clutch push ring over the clutch drum, and on top of the discs with the three pins projecting upward (see Group No. 4, Cut No. 13). You will note the remaining parts are placed as they will be assembled. Next bolt the driving plate in position so that the adjusting screws of the clutch fingers will bear against the clutch push ring pins. Before proceeding further it would be a good plan to test the transmission by moving the plates with the hands. If the transmission is properly assembled they will revolve freely. The clutch parts may be assembled on the driving plate hub as follows: Slip the clutch shift over the hub so that the small end rests on the ends of the clutch fingers. Next put on the clutch spring, placing the clutch support inside so that the flange will rest on the upper coil of the spring and press into place, inserting the pin in the driving plate hub through the holes in the side of the spring support. Then turn the clutch spring support until the pin fits into the lugs on the bottom of the support. The easiest method of compressing the spring sufficiently to insert the pin is to loosen the tension of the clutch finger by means of the adjusting screws. When tightening up the clutch again the spring should be compressed to within a space of two or two and one-sixteenth inches to insure against the clutch slipping. Care should be exercised to see that the screws in the fingers are adjusted so the spring is compressed evenly all around.

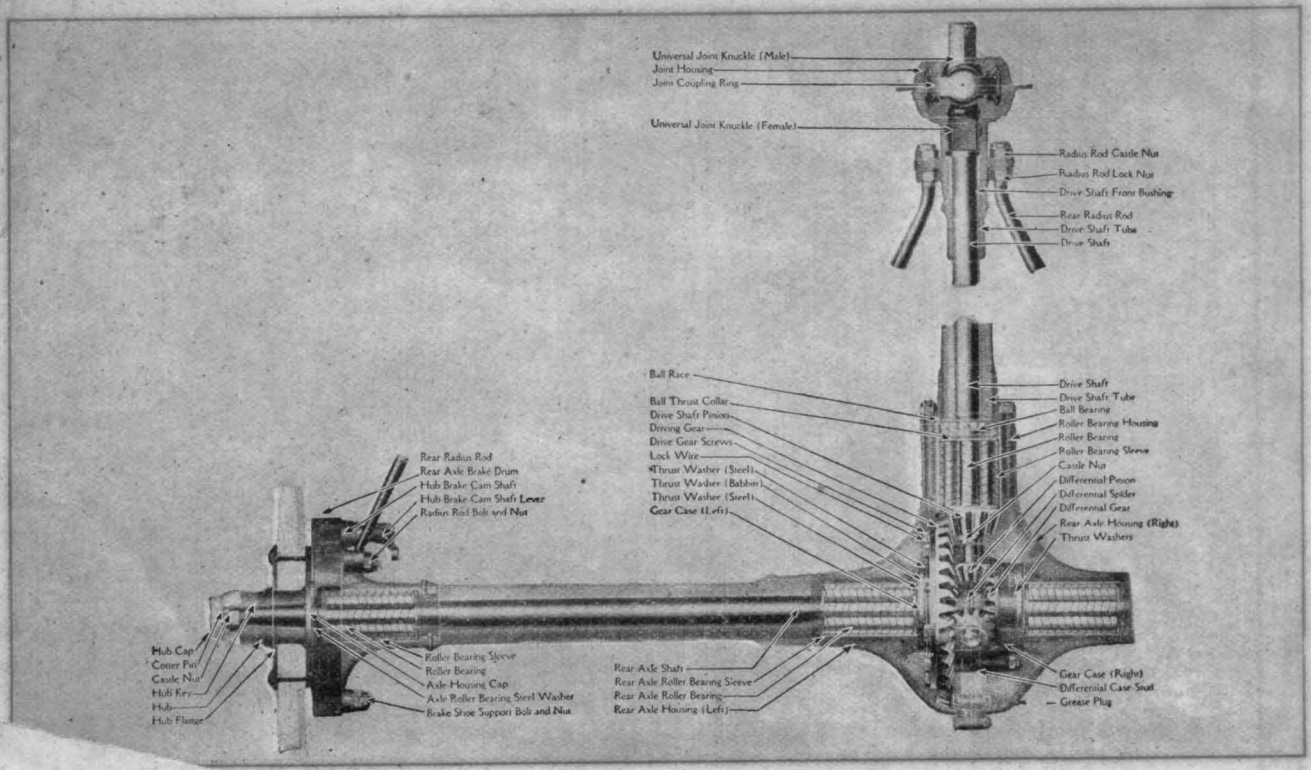


The Rear Axle System. (Cut No. 14)

# The Rear Axle Assembly

***How is the Rear Axle removed?*** *Answer No. 77*

Jack up car and remove rear wheels as instructed in Answer No. 89. Take out the four bolts connecting the universal ball cap to the transmission case and cover. Disconnect brake rods. Remove nuts holding spring perches to rear axle housing flanges. Raise frame at the rear end, and the axle can be easily withdrawn.

***How is the Universal Joint disconnected from the Drive Shaft?*** *Answer No. 78*

Remove two plugs from top and bottom of ball casting and turn shaft until pin comes opposite hole, drive out pin and the joint can be pulled or forced away from the shaft and out of the housing.

***How are Rear Axle and Differential disassembled?*** *Answer No. 79*

With the universal joint disconnected, remove nuts in front end of radius rods and the nuts on studs holding drive shaft tube to rear axle housing. Remove bolts which hold the two halves of differential housing together. If necessary to disassemble differential a very slight mechanical knowledge will permit one to immediately discern how to do it once it is exposed to view. Care must be exercised to get every pin, bolt and keylock back in its correct position when reassembling.

***How is the Drive Shaft Pinion removed?*** *Answer No. 80*

The end of the drive shaft, to which the pinion is attached, is tapered to fit the tapered hole in the pinion, which is keyed onto the shaft, and then secured by a cotter-pinned "castle" nut. Remove the castle nut, and drive the pinion off.

***How are the Differential Gears removed?*** *Answer No. 81*

The differential gears are attached to the inner ends of the rear axle shaft. They work upon the differential pinions when turning a corner, so that the axle shafts revolve independently, but when the car is moving in a straight line the differential pinions and differential gears and axle shafts move as an integral part. If you will examine the rear axle shafts you will notice that the gears are keyed on, and held in position by a ring which is in two halves and fits in a groove in the rear axle shaft. To remove the differential gears, force them down on the shaft, that is, away from the end to which they are secured, drive out the two halves of ring in the grooves in shaft with screw-driver or chisel, then force the gears off the end of the shafts.

***How is the Rear Axle Shaft removed?*** *Answer No. 82*

Disconnect rear axle as directed in Answer No. 77, then unbolt the drive shaft assembly where it joins the rear axle housing at the differential. Disconnect the radius rods and brake rods at the outer ends of the housing. Take out the bolts which hold the two halves of the rear axle housing together at the center and remove the housing. Take the inner differential casing apart and draw the axle shaft out.

After replacing the axle shaft be sure that the rear wheels are firmly wedged on at the outer end of the axle shaft and the key in proper position. When the car has been driven thirty days or so, make it a point to remove the hub cap and set up

the lock nut to overcome any play that might have developed. It is extremely important that the rear wheels are kept tight, otherwise the constant rocking back and forth against the keyway may in time cause serious trouble.

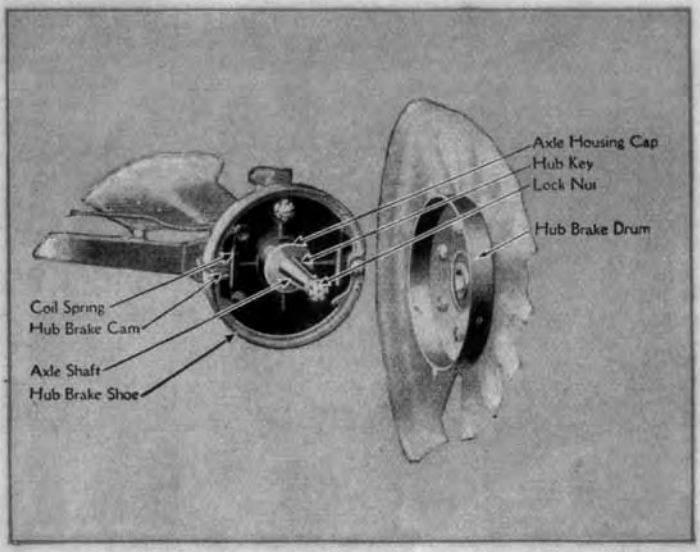


The Ford Emergency Brake. (Cut No. 15)

If the rear axle or wheel is sprung by skidding against a curb, or other accident, it is false economy to drive the car without correcting the trouble, as tires, gears and all other parts will suffer. If the axle shaft is bent, it can, with proper facilities, be straightened, but it is best to replace it.

# The Ford Muffler

***Why is the Muffler necessary?***

## *Answer No. 83*

The exhaust as it comes from the engine through the exhaust pipe would create a constant and distracting noise were it not for the muffler. From the comparatively small pipe, the exhaust is liberated into the larger chambers of the muffler, where the force of the exhaust is lessened by expansion and discharged out of the muffler with practically no noise. The Ford muffler construction is such that there is very little back pressure of the escaping gases, consequently there is nothing to be gained by putting a cut-out in the exhaust pipe between the engine and the muffler.

***How is the Muffler disconnected?***

## *Answer No. 84*

Disconnect the exhaust pipe from the motor by unscrewing the pack nut and remove the bolts which hold the muffler to the frame. After the muffler has been disconnected it can be disassembled by removing the nut at the rear end.

# The Running Gear

*What care should the Running Gear have?* — *Answer No. 85*

In the first place it at all times should have proper lubrication (see chapter on Lubrication). Once in every thirty days the front and rear axles should be carefully gone over to see that every moving part, such as the bushings in spring connections, spring hangers, steering knuckles and hub bearings, are thoroughly lubricated, and that all nuts and connections are secured with cotter pins in place. The spring clips, which attach the front spring to the frame, should be inspected frequently to see that everything is in perfect order.

*How is the Front Axle removed?* — *Answer No. 86*

Jack up front of car so wheels can be removed (see Answer No. 89), disconnect steering gear ball arm from the spindle connecting rod, disconnect radius rod at ball joint, and remove two cotter pin bolts from spring shackle on each side, so detaching front spring.

To disconnect radius rod from axle, remove cotter-pinned nuts. To remove radius rod entirely, take the two bolts out of the ball joint and remove lower half of cap.

*In case of accident, how is the Front Axle straightened?* — *Answer No. 87*

Should the axle or spindle become bent extreme care must be used to straighten the parts accurately. Do not heat the forgings, as this will untemper the steel, but straighten them cold. If convenient it would be better to return such parts to the dealer, where they may be properly straightened in jigs designed for that purpose. It is very essential that the wheels line up properly (see Answer No. 90).

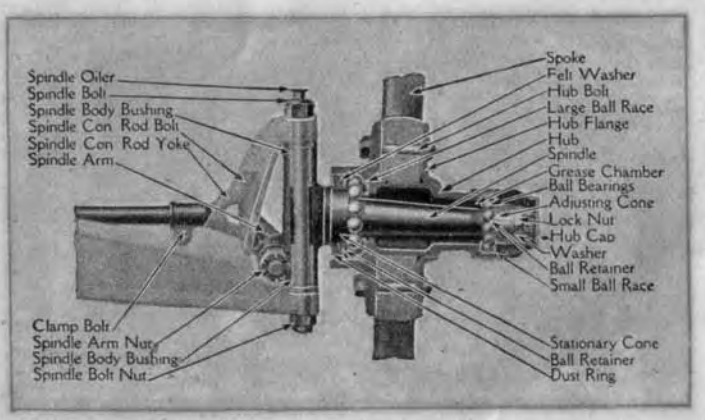


The Ford Spindle and Front Hub Assembly. (Cut No. 16)

The eye is not sufficiently accurate to determine whether the parts have been properly straightened, and excessive wear of the front tires will occur if everything is not in perfect alignment.